ALGORITHM FOR SYNTHESIZING THE Y SYSTEMMANAGING A TWO-MASS ELASTIC DYNAMIC OBJECT

[1]Gulchehra Alimova, [2]Surojiddin Yuldashev, [3]Nabiyev Khojakbar
Doctorate ,Department of Information Processing Systems and Control, Tashkent State Technical University[1], Assistant, Tashkent Institute of Textile and Light Industry[2], Student, Tashkent Institute of Textile and Light Industry[3]

ABSTRACT

The paper deals with the creation of a control system for a dynamic object with an elastic property, described by a system of second-order differential equations, which is further transformed into two polynomial equations in matrix form. To solve the problem of synthesizing a control system , a two-matrix polynomial with unknown parametersis introduced into the system of equations, which is the transfer function of the controller, whose order is equal to two, giving the system the properties of astaticismi. To solve this problem, the matrix polynomial equation is transformed into a matrix linear equation with real coefficients. The proposed method of controller synthesis allows to ensure the stability of the system, while it gives the properties of astatism, the duration of transitionof one process is determined by the location and poles of the system and the desired quality indicators. The results of the simulation showed that the synthesized control system meets the requirements of the object.

Keywords: keywords: synthesis, regulator, two-channel , two-mass, multichannel regulator, polynomial decomposition, regulator implementation, astaticism.

INTRODUCTION

Currently, one of the most important tasks of automatic control of technological processes in the textile industry is the production of high-quality products using resource-saving technologies. This is directly related to the reduction in the cost of the finished product. It is known that the quality of textile products depends on the quality of the thread. And the quality of the thread depends on the process of pulling the tape, which ensures parallelization, thinning and straightening of the fibers. Anew requirement for pulling the belt pulling process is to obtain a product with a given number of fibers.

Due to the randomness of the field of the friction force of the fibrous material in the exhaust device, the pulled tape has an uneven shape, which significantly affects such qualitative indicators as the evenness and density of the tape. In addition, the process of tape extraction is significantly influenced by the quality of cleaning and the humidity of the quality of fiber interleaving in mixtures, etc. These factors are of an uncertain nature, which determines the use of methods of intelligent technologies to solve the problem of controlling the object (process) under consideration. Currently widely used intelligent control systems in various industries have the ability to adapt the control system to various types of disturbances.

Currently, there are many methods that are used as the basis for the development of intelligent control systems for technological processes. The most common of them are expert systems (knowledge-based systems), fuzzy logic, genetic algorithms, neural networks, etc. [7,8,10,11,12,13,14,16,17]. At the same time, special attention is paid to the hybrid application of methods of intelligent technologies and modern management theory.

In this regard, there is a need for research and development of a control system for the process of pulling fibrous material based on the joint use of methods of intelligent technologies and the theory of automatic control. Such systems have the ability to understand and learn about the control object, environmental disturbances, and working conditions. With this approach, artificial neural networks, due to their abilities for self-organization and learning, are as promising means of creating intelligent control systems for the object under consideration. The

paper considers the issues of synthesis of a control system for the process of pulling a fibrous material in the class of a two-dimensional two-mass system, [1,2,3].

METHOD

As an object of control, we consider a two-mass system without damping [5,6,9]. It is known that the most general form of writing the differential controls of the motion of such systems is the equations of motion of a fibrous material in generalized coordinates-the Lagrange equations [4].

Let the control object receive two control signals - u_1 and u_2, applied to the masses of the material m_1 and m_2. The controlled values are the coordinates (the thinning and the speed of the tape) - y_1 and y_2, calculated from the equilibrium state. The equation of the dynamics of the control object in the absence of friction forces will be written in the following form:

$$m_1\ddot{y}_1 = -k_1 y_1 + k_2(y_2 - y_1) + u_1,$$

$$m_2\ddot{y}_2 = -k_2(y_2 - y_1) + u_2,$$

where k_1 and k_2 is the stiffness of the system (control object)

In matrix form, these equations are written as follows:

$$\left(\begin{bmatrix} m_1 & 0 \\ 0 & m_2 \end{bmatrix} s^2 + \begin{bmatrix} k_1 + k_2 & -k_2 \\ -k_2 & k_2 \end{bmatrix}\right) y = u.$$

Here $y = (y_1\, y_2)^t$ and $u = (u_1\, u_2)^t$. Let's introduce the notation

$$D_2 = \begin{bmatrix} m_1 & 0 \\ 0 & m_2 \end{bmatrix}; \quad D_0 = \begin{bmatrix} k_1 + k_2 & -k_2 \\ -k_2 & k_2 \end{bmatrix};$$

Then the dynamics of the object представляis represented in the following form: $D(s)y = u$, rde $D(s) = D_2(s)^2 + D_0$, соответствующийcorresponding to the left-hand matrix polynomial description $y = D(s)^{-1}N(s)u.$ Here $y = D(s)^{-1}N(s) = W_{ob}(s)$ -the matrix transfer function of the object, $N(s) = I$ - the identity matrix. Let's take the standard structure of the management system:

$$y = W_{ob}(s)u, \quad u = W_r(s)e, \quad e = \nu - y,$$

where $W_r(s)$ is the transfer function of a two-dimensional controller , ν *and is* the vector of setting actions.

Let's define the transfer function of the system:

$$W_{cl}(s) = (I + W_{ob}(s)W_r(s)^{-1}W_{ob}(s)W_r(s). \tag{1}$$

Using the equality $A(I + BA)^{-1} = (I + BA)^{-1}A,$, we get

$$W_{cl}(s) = W_{ob}(s)(I + W_r(s)W_{ob}(s))^{-1}W_r(s). \tag{2}$$

$$W_{cl}(s) = W_{ob}(s)W_r(s)(I + W_{ob}(s)W_r(s))^{-1}. \tag{3}$$

Taking into account $A(I + A)^{-1} = (I + A^{-1})^{-1}$ expression (3), we obtain

$$W_{cl}(s) = (I + (W_{ob}(s)W_r(s))^{-1})^{-1}. \tag{4}$$

There arefour possible ways to describe the transfer function of the system (1) -(4).

We choose the right decomposition of the object and the left decomposition of the controller:

$$W_{ob}(s) = N(s)D(s)^{-1}, \quad W_r(s) = Y^{-1}(s)X(s). \tag{5}$$

We find thecharacteristic matrix of the system by substituting (5) into (4):

$$y = N(s)(Y(s)D(s) + X(s)N(s))^{-1} X(s)\nu.$$

The denominator of the transition function $Y(s)D(s) + X(s)N(s)$ is the characteristic (matrix) polynomial. Thus, with a known right-hand representation of the object, assuming, that we are looking for a regulator in the form of a left expansion, the synthesis problem reduces to solving the equation

$$C(s)Y(s)D(s) + X(s)N(s), \tag{6}$$

зhere $C(s)$ is the desired characteristic matrix of the system.

We use the representation of the object and the regulator (5), which leads to нthe need to solve equation (6). In our case $D(s) = D_2 s^2 + D_0$, $N(s) = I$. For the regulator, we choose polynomial matrices of the "numerator" and "denominator" of degree two:

$$Y(s) = Y_2 s^2 + Y_1 s, \quad X(s) = X_2 s^2 + X_1 s + X_0. \tag{7}$$

In the regulator equation (5) $Y(s)u = X(s)e$, we substitute the values of the "numerator" and "denominator" polynomials (7):

$$(Y_2 s^2 + Y_1 s)u = (X_2 s^2 + X_1 s + X_0)e.$$

We transform the formula so that the calculations are reduced to integration:

$$u = Y_2^{-1}(X_2 e + s^{-1}(-Y_1 u + X_1 e + s^{-1} X_0 e)).$$

here it is assumed that $\det Y_2 \neq 0$.

They required the system to meet *the astaticism condition*, i.e. they set $Y_0 = 0$ it . Then the degree of the characteristic matrix is four:

$$C(s) = C_4 s^4 + C_3 s^3 + C_2 s^2 + C_1 s + C_0. \tag{8}$$

After substituting (7) in (6) and taking into account (8), we obtain

$$C_4 s^4 + C_3 s^3 + C_2 s^2 + C_1 s + C_0 = (Y_2 s^2 + Y_1 s)(b) + (X_2 s^2 + X_1 s + X_0).$$

We equate the coefficients for the same powers *of s*:

$$Y_2 D_2 = C_4, \qquad Y_1 D_2 = C_3, \; Y_2 D_0 + X_2 = C_2, \qquad Y_1 D_0 + X_1 = C_1, \; X_0 = C_0. \tag{9}$$

Equations (9) in matrix form are written as follows:

$$(Y_2 Y_1 / X_2 X_1 X_0) \begin{bmatrix} D_2 & 0 & D_0 & 0 & 0 \\ 0 & D_2 & 0 & D_0 & 0 \\ -- & -- & -- & -- & -- \\ 0 & 0 & I & 0 & 0 \\ 0 & 0 & 0 & I & 0 \\ 0 & 0 & 0 & 0 & I \end{bmatrix} = (C_4 C_3 C_2 C_1 C_0). \tag{10}$$

Transposing the previous equation we obtain a more familiarную form записоf writing:

$$\begin{pmatrix} D_2^t & 0 & \vdots & 0 & 0 & 0 \\ 0 & D_2^t & \vdots & 0 & 0 & 0 \\ D_0^t & 0 & \vdots & I & 0 & 0 \\ 0 & D_0^t & \vdots & 0 & I & 0 \\ 0 & 0 & \vdots & 0 & 0 & I \end{pmatrix} \cdot \begin{pmatrix} Y_2^t \\ Y_1^t \\ X_2^t \\ X_1^t \\ Y_0^t \end{pmatrix} = \begin{pmatrix} C_4^t \\ C_3^t \\ C_2^t \\ C_1^t \\ C_0^t \end{pmatrix}$$

Letthe management board object have the following data:

$$m_1 = 6,\ m_2 = 2,\ k_1 = 1,\ k_2 = 2.$$

then

$$D_2 = \begin{pmatrix} 6 & 0 \\ 0 & 2 \end{pmatrix}, \quad D_0 = \begin{pmatrix} 3 & -2 \\ -2 & 2 \end{pmatrix}. \tag{11}$$

ANALYSIS OF RESEARCH RESULTS

The characteristic matrix determines the poles of a closed system and, consequently, the speed of the system. Let all poles be -1. Thus, the characteristic matrix of the system has a simple form:

$$C(s) = (s+1)^4 I,$$

where I is a diagonal matrix of size 2×2. We open the polynomial $C(s)$ andobtain

$$C_4 = I,\ C_3 = 4I,\ C_2 = 6I,\ C_1 = 4I,\ C_0 = I. \tag{12}$$

Substitute D_0, D_2, C_0, C_1, C_2, C_3, C_4 from formulas (11) and (12) in (10):

$$\begin{bmatrix} & & \vdots & & & \\ Y_2 & Y_1 & \vdots & X_2 & X_1 & X \\ & & \vdots & & & \end{bmatrix} \times$$

$$\times \begin{bmatrix} 6 & 0 & 0 & 0 & 3 & -2 & 0 & 0 & 0 & 0 \\ 0 & 2 & 0 & 0 & -2 & 2 & 0 & 0 & 0 & 0 \\ 0 & 0 & 6 & 0 & 0 & 0 & 3 & -2 & 0 & 0 \\ 0 & 0 & 0 & 2 & 0 & 0 & -2 & 2 & 0 & 0 \\ -- & -- & -- & -- & -- & -- & -- & -- & -- & -- \\ 0 & 0 & 0 & 0 & 1 & 0 & 0 & 0 & 0 & 0 \\ 0 & 0 & 0 & 0 & 0 & 1 & 0 & 0 & 0 & 0 \\ 0 & 0 & 0 & 0 & 0 & 0 & 1 & 0 & 0 & 0 \\ 0 & 0 & 0 & 0 & 0 & 0 & 0 & 1 & 0 & 0 \\ 0 & 0 & 0 & 0 & 0 & 0 & 0 & 0 & 1 & 0 \\ 0 & 0 & 0 & 0 & 0 & 0 & 0 & 0 & 0 & 1 \end{bmatrix} =$$

$$= \begin{bmatrix} & & \vdots & & & \vdots & & & \vdots & & & \vdots & & \\ 1 & 0 & \vdots & 4 & 0 & \vdots & 6 & 0 & \vdots & 4 & 0 & \vdots & 1 & 0 \\ & & \vdots & & & \vdots & & & \vdots & & & \vdots & & \\ & & \vdots & & & \vdots & & & \vdots & & & \vdots & & \\ 0 & 1 & \vdots & 0 & 4 & \vdots & 0 & 6 & \vdots & 0 & 4 & \vdots & 0 & 1 \\ & & \vdots & & & \vdots & & & \vdots & & & \vdots & & \end{bmatrix}$$

The matrix of unknowns is denoted by K, the matrix of size 10×10 is denoted by A, and the matrix on the right side of the previous equation – *C* we obtain the solution of the equationK=C*A^{-1}:

$$\aleph = \begin{pmatrix} 0.17 & 0 & \vdots & 0.67 & 0 & \vdots & 0.33 & 2 & \vdots & 2 & 1.33 & \vdots & 1 & 0 \\ 0 & 0.5 & \vdots & 0 & 2 & \vdots & 5 & 4 & \vdots & 4 & 0 & \vdots & 0 & 1 \end{pmatrix}$$

DISCUSSION

To model an object, we use expression (5) and write: $N(s)D^{-1}(s)u = y$. For our example $N(s) = I$, which allows us to get $D_2 s^2 + D_0$ Next up $(D_2 s^2 + D_0)y = u$ It remains to write down the modeling algorithmния $y = s^{-2} D_2^{-1}(D_0 y + u)$.

The implementationof the management Board's system is shown in Fig. 1, and the transients are shown in Fig. 2 and 3.

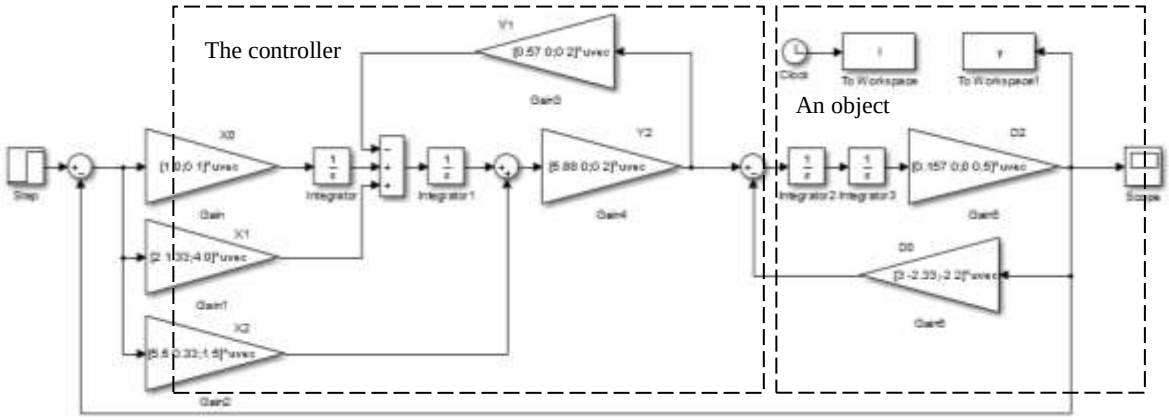

Figure 1 .. **Control system model implemented in MATLAB**

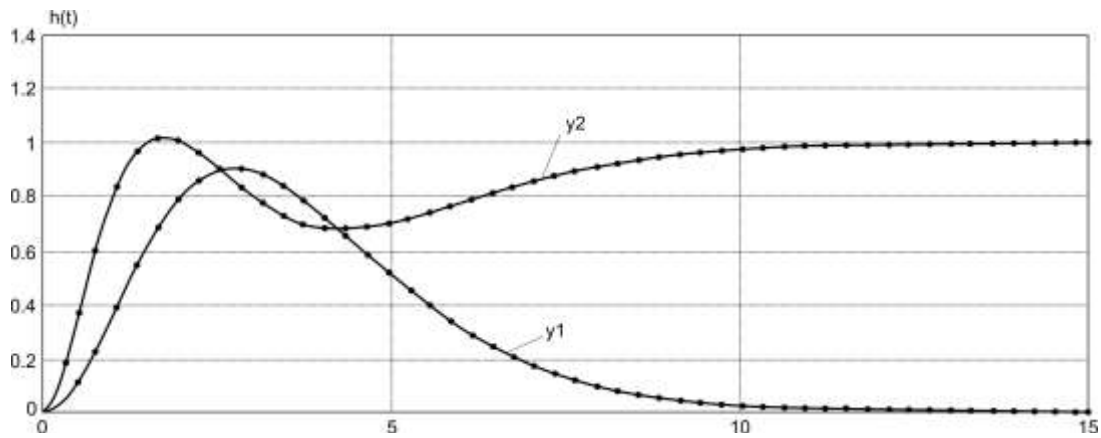

Figure 2 .. ***Transients in the system when*** $\nu = [1\ 0]^t$

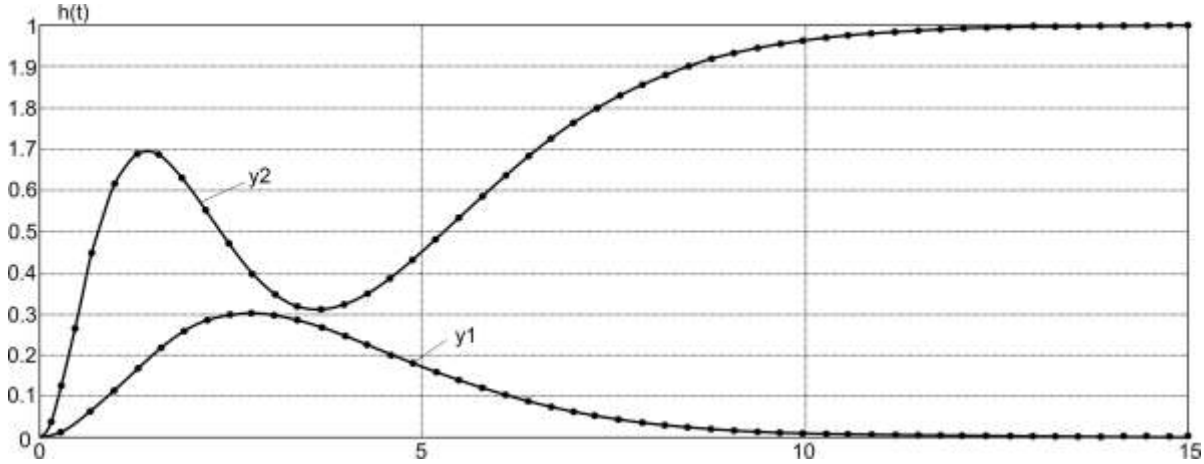

Figure 3 .. **Transients in the system when** $\nu = [0\ 1]^t$

Transients in the system during exposure $\nu = [1\ 0]^t$ are unsatisfactory in terms of overshoot. However, in steady-state mode, the errors are zero.

CONCLUSION

In this work, in order to control a two-mass dynamic object, it is proposed to use a two-dimensional PI controller, which makes it possible to achieve zero in a static mode and ensure the autonomy of communication channels of a control system in a static mode. The proposed polynomial method is distinguished by the simplicity of the implementation of the control system in real language and provides the required quality of regulation.

REFERENCES

1. *Voivode A. A.* Stabilization of a two-mass system: a polynomial method for the synthesis of a two-channel system.Sbornik nauchnykh trudov NGTU. - 2009. - № 4 (58). - P. 121-124.
2. *Bobobekov K. M., Voivode A. A.* A polynomial method for synthesizing a PI-D controller for a nonminimally phase object. Sbornik nauchnykh trudov NGTU [Collection of scientific papers of NSTU]. - 2015. - № 4 (82). - P. 7-20.
3. *Voronoi V. V., Shoba E. V.* Stabilization of a three-mass system: atwo-channel PD regulator / / Collection of scientific works of NSTU. - 2010. - № 4 (62). - P. 183-188.
4. *Chen C.T.* Linear system theory and design. - 3rd ed. - New York: Oxford University Press, 1999. - 334 p.
5. *Katasanov D. N.* Stabilization of a two-channel two-mass system: a frequency method for synthesizing a two-channel system.Sbornik nauchnykh trudov NGTU. - 2010. - № 4 (62). - P. 167-174.
6. *VoivodaA. A.* Stabilization of a two-mass system: a modal synthesis method using polynomial expansion // Scientific Bulletin of NSTU. - 2010. - № 1 (38). - P. 195-198.
7. Gostev V. I. Design of fuzzy regulators for automatic control systems. - S-Pb.: BHV-Petersburg, 2011 – - 416s

8. A. R. Marakhimov, H. Z. Igamberdiev, A. N. Yusupbekov, and I. H. Siddikov. Fuzzy-multiple models and intelligent process control. - Toshkent 2014. - 243 p.
9. Bitus E. I. Computer modeling and optimization of the processes of comb tape formation in wool spinning. Moscow: Znanie Publ., 2007, 238 p. (in Russian).
10. Vanin A.S., Kozlov A.B. Kompyuternoye modelirovaniye neyrosetevogo regulyatora // Tekstilnaya promishlennost (nauchniy almanax), 2008.-№4. s.56-58.
11. Yusupbekov N.R., Aliyev R.A., Aliyev R.R., Yusupbekov A.N. Intellektualniye sistemi upravleniya i prinyatiya resheniy. Tashkent «Uzbekistan milliy ensiklopediyasi» 2014, -490s.
12. I. H.S. iddikov, D. A. Khalmatov, G. R. Alimova. Adaptive-fuzzy automatic control system for tape drawing//ТекстильнТextile magazine of Uzbekistan. 2020. №1. C.77-84
13. Siddikov I.X., Iskandarov Z . Synthesis of adaptive-fuzzy control system of dynamic in conditions of uncertainty of information // International Journal of Advanced Research in Science, Engineering and Texnology,5(1): 5089-5093. 2018
14. Xakimovich, S.I., Olimovich, K.U., Nikolayevna, I.R., Tashkenboevna, Y.S., Raximjonovna, A.G. Design of standart regulators for multi-link control objects. Turkish Journal of Computer and Mathematics Education, 2021, 12(7), стр. 349-353
15. Nigmatova, F.U., Shomansurova. M.Sh., Siddikov. I.Kh., Musakhanov. A.A. Design technique for organizayional-process flowsheet in clothing manufacture. 2014. Automation and Remote Control. 75(6). c.1130-1136
16. D.A.Khalmatov, U.O.Khuzhanazarov, G.R.Alimova, J.M.Murodov. (2021) Adaptive fuzzy control system for multi-dimensional dynamic object under the conditions of uncertainty of information, International journal of advanced research in science, engineering and technology vol. 8, issue 2 , february 2021. pp.16608-16612.

IEJRD
E-ISSN NO:2349-0721